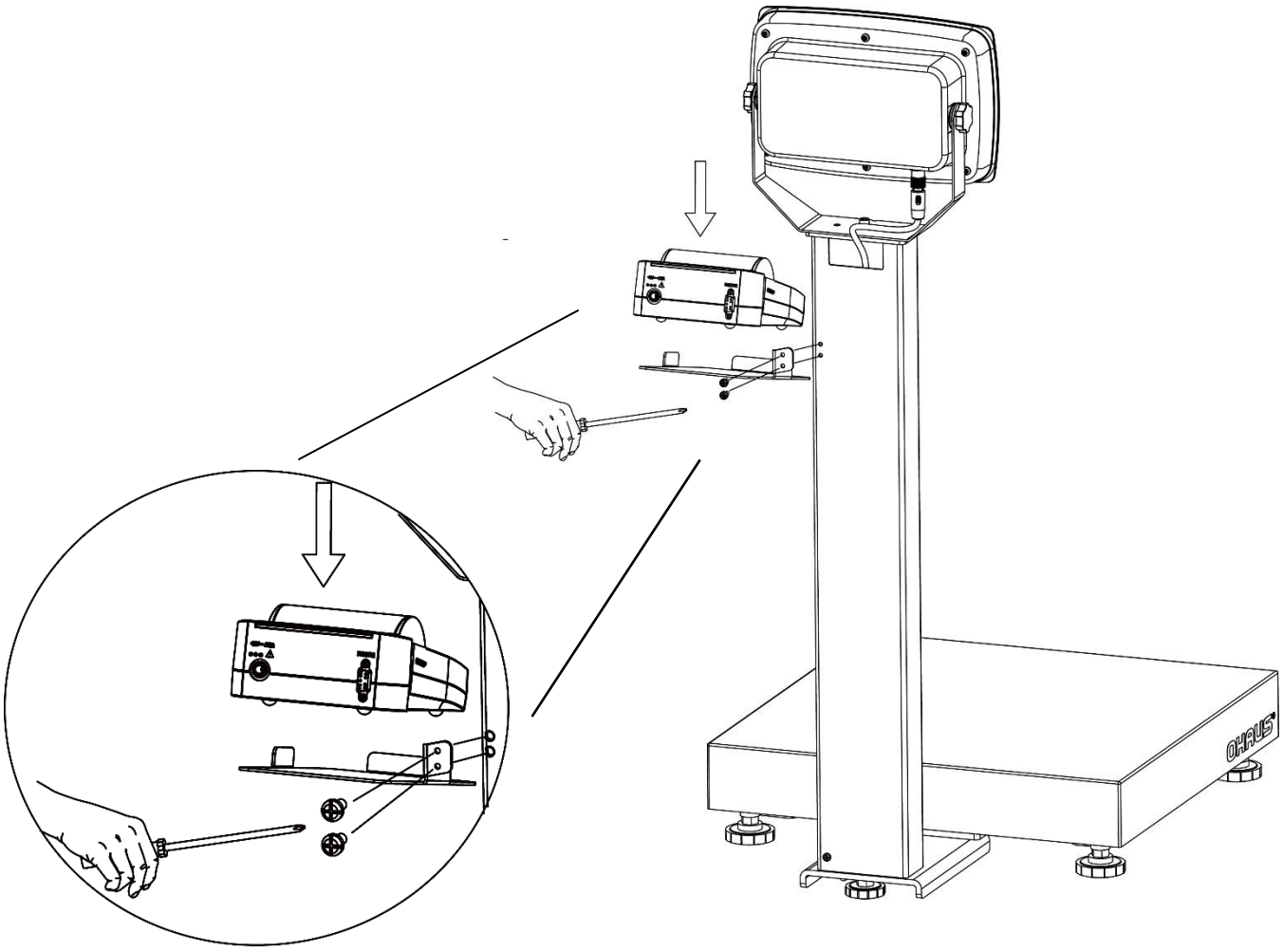

P/N 30425226 A ©Ohaus Corporation 2017, all right reserved.

Printed in China